	Company Datasheet #	NA103B
	Revision #:	B
	Date:	050323

NA103B

Mechanical Mount Antenna



The NA103B permanent mount GPS value antenna provides 40 dB gain and great out-of-band rejection performan precision tuned custom ceramic patch element for maximum signal reception and 15KV ESD circuit protection. This minimizes GPS loss-of lock even when conditions are less than ideal. Weather proof, all-plastic, non-corrosive low profile package.

General Notes

The NA103B have been designed to be hard mounted to a flat surface or to a mast. This guide is intended to aid the installer in properly mounting for optimum GPS performance to a flat surface. When installed properly as per the following instructions the installation meets IP67 environmental specifications.

Mounting Surface

The mounting surface most not exceed 6.5mm in thickness. The surface must be flat, clean and free of flaking paint or loose metal debris in order to have a watertight (IP67) installation.

Mounting Angle

There will be very little degradation in GNSS performance with slopes up to 30 degrees from horizontal. The antenna wil angles beyond this point but the performance will continue to degrade with increasing slope. It is recommended that the slope not exceed 45 degrees.

Mechanical Specifications

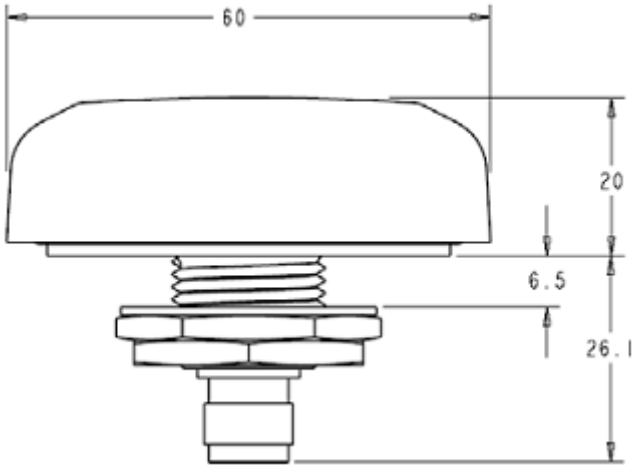

Installation Procedure

For optimum GNSS performance, the antenna must have a clear view of the sky and preferably have a ground plane. A metalic ground plane of 10cm diameter (4 inches) is sufficient to realize virtually all ground plane benefits. A larger ground plane will provide no additional advantages. The antenna will operate without a ground plane with a slightly wider beam-width.

The product comes equipped with all necessary mounting accessories, 1 silicone rubber gasket (attached to the base), 1 metal washer and 2 nickel-plated brass panel nuts ¾ inch size.

1. Select the location on the mounting surface. Make a ¾ inch diameter hole using the appropriate hole-punch, saw or drill.
2. Remove from the antenna the 2 panel nuts and the metal washer.
3. Carefully insert the antenna in the ¾ inch diameter mounting surface opening.
4. Place the metal washer and 1 panel nut on the thread of the antenna, on the inside of the mounting surface and tighten the first panel nut. The recommended torque for the 1st panel nut is 15-20 in-pounds.
5. Screw on and tighten the 2nd panel nut while holding the 1st panel nut in stationary position. The recommended maximum torque for the 2nd panel nut is 35-45 in-pounds. Do not exceed recommended maximum torque.

Technical specifications

Features

- GPS L1, GLONASS G1, Galileo E1 and Beidou B1 frequencies
- Proprietary filtering design allows wideband coverage while achieving superior out-of-band rejection for all GNSS frequencies
- 40dB LNA gain
- Low noise figure < 2.0dB
- IP67, low-profile design**

STANDARD CONFIGURATION

Model	Connector	Mount
8178D-HR	TNC Female	¾-inch thru-hole or bracket mount*

ELECTRICAL SPECIFICATIONS - GNSS ANTENNA

Frequency Band	LNA Gain	Element Gain	Polarization	Out of Band Rejection
1559-1610 MHz	40 dB +/- 4 dB (typical)	2 dBic @ 90°	Right hand circular	f0 = 1586 MHz f0 ± 50 MHz: ≥ 60 dBc f0 ± 60 MHz: ≥ 70 dBc

ELECTRICAL SPECIFICATIONS - GNSS ANTENNA, continued

Current Draw	DC Voltage	Noise Figure	Nominal Impedance
< 25mA (typical)	2.8-5.5V (operating)	< 2.0 dB (typical)	50 ohms

MECHANICAL & ENVIRONMENTAL SPECIFICATIONS

Dimensions	Weight	Housing Material	Shock	Vibration	Temperature Range	Ingress Protection
2.36 OD x 0.83 H in (60 x 21 mm)	0.1 lbs (50 g)	Black, Lexan EXL9330	Vertical axis 50G, other axes 30G	3 axis, sweep = 15 min 10 – 200 Hz log sweep: 3G	-40°C to +85°C operating	IP67**

This document is copyright © November 20, 2026 Novus Power Products LLC. All rights reserved. This document is provided for information purposes only; contents are subject to change without notice. It is not warranted to be error-free, nor subject to any other warranties or conditions including implied warranties and conditions of merchantability or fitness for a particular purpose.