NR3700-OG

GNSS Locked Reference OCXO Holdover/AutoCal

KEY FEATURES

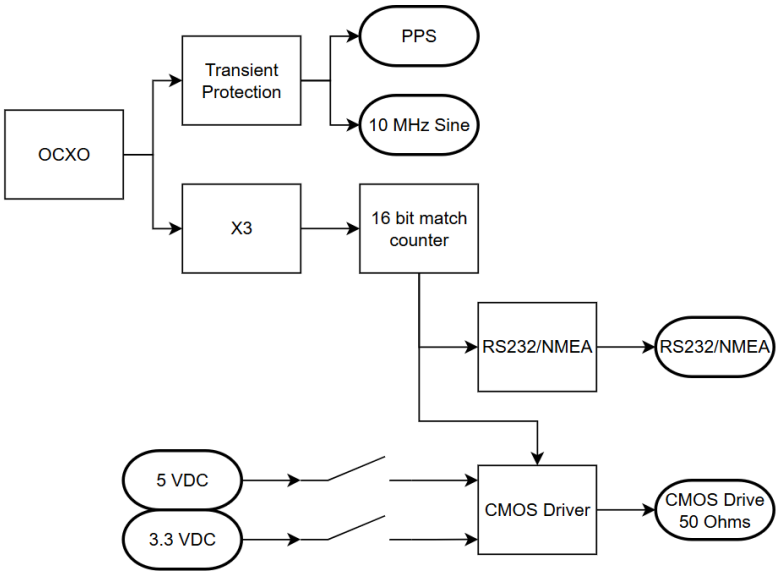

The signal source is a GNSS driven, mixed-signal phase lock loop generating a 10 MHz sine output from an intrinsically low jitter voltage-controlled crystal oscillator. The output is a 0.4 Vrms sine. The unit also features 1PPS, NMEA, and Auto Cal. The unit continually monitors temperature and aging such that when the unit goes into holdover, the output frequency is at the last frequency ±10 ppb. There is extensive built-in test that drives an LED and relay contacts for system integration. The can operate from DC power from -60 Vdc to +60 Vdc- in three ranges. Power converter provides electrical isolation from the power source to the output (configuration option). Unit is available in a kit that includes the unit, antenna, power supply and cable to connect the antenna to the unit.

Product Highlights

High Sensitivity GPS Receiver

The 26 channel high-sensitivity, high-accuracy Multi-GNSS receiver. Supports TRAIM, GPS, GLONASS, QZSS, SBAS, Active Anti-Jamming and Advanced Multipath Mitigation Functions

Typical Phase Noise- 10 MHz Sine

Offset Frequency (Hz)	Typical (dBc / Hz)
10	-85
100	-115
1k	-140
10k	-145

Auto Cal

Multiple times a day, the unit stores the temperature/time performance of the holdover crystal. If GPS is lost, the unit uses the last best known compensation.

Technical specifications

10 MHz Sine	5 ±1 dBm ,50 ohm- BNC	
Harmonics	Less than -30 dBc	
Locked Stability	<~E-11 after 100 seconds	
First Year Frequency Stability	±50 ppb (long-term unlocked)	
Temp Stability	±10 ppb (unlocked)	
Holdover offset	±10ppb (frequency offset after loss of GPS)	
PPS (optional)	15ns @1σ RMS accuracy, 3.3 volt logic, output impedance CMOS (±20ma)	
Power Requirements	Three ranges ± (9 to 18, 18 to 36, 36 to 65) Vdc (ac adapter available) Power converter can be configured to provide > 500 volts isolation)	
Connectors	BNC-1 10 MHz output	
	SMA PPS 3.3 Vdc CMOS (optional)	
	4 pin terminal block ((Digikey 277-2419-ND (ships with mate (Digikey 277-2418)-ND (reverse polarity operational)	
NMEA (optional)	NMEA-0183 at full rs232 levels.	
GNSS receiver	GPS L1 C/A, GLONASS L1OF, QZSS L1 C/A, SBAS L1 C/A (Ready): Galileo E1B/E1C, QZSS L1S	
Channels	26 channels (GPS, GLONASS, QZSS, SBAS)	
Sensitivity		
GPS	Tracking: -161 dBm	
	Hot Start: -161 dBm	
	Warm Start: -147 dBm	
	Cold Start: -147 dBm	
	Reacquisition: -161 dBm	
GLONASS		
	Tracking: -157 dBm	
	Hot Start: -157 dBm	
	Warm Start: -143 dBm	
	Cold Start: -143 dBm	
	Reacquisition: -157 dBm	
	With Novus recommended antenna	
Antenna with LNA		
Antenna power	3.5 Vdc, < 35 ma (on center conductor) (factory configurable to 5 Vdc)	
Frequency	1574-1607 MHz	
Nominal Gain	2 dBic	
Amplifier gain	26 dB	
Noise Figure	< 2.0 dB	
Out of Band rejection	Fo±50MHz=60 dBc, Fo±60 MHz	
DC current	<25 ma@3.5 Vdc	

Environmental and Mechanical

Operating temperature	0 to 50C non-condensing (extended temperature range available)	
Storage temperature	-40 to 70C	
Width	4 inch (exclusive of connectors)	
Depth	5 inch	
Height	1.5 in	
Weight	~16 oz	

This document is copyright © May 27, 2026 Novus Power Products LLC. All rights reserved. This document is provided for information purposes only; contents are subject to change without notice. It is not warranted to be error-free, nor subject to any other warranties or conditions including implied warranties and conditions of merchantability or fitness for a particular purpose.